1240BW

IP 65 12*40w Bee Eye Moving Head

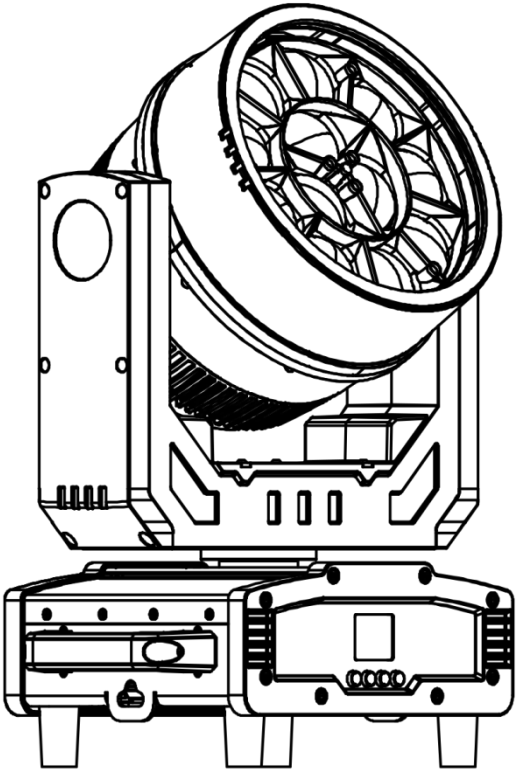

USER MANUAL

CONTENTS

Safety Instructions 3-4

Technical Specification 4-5

Mounting 6-7

Display and Menu 8-10

LUX Data…….....……11

DMX Set Up 12-13

DMX Channel List 13-30

Attention 31

Trouble Shooting 31-32

Products Size 32

Fixture Cleaning 33

Multiple Unit Power Linking 33

Fuse Replacement 34

Statement

Fixtures should be fastened on the hooks with screws. Make sure the installation is secure to prevent chattering and slipping during operation. Also make sure that the structure of the connected luminaire can support the luminaire 10 times the weight. At the same time, when installing the lamps, they also use a safety rope to support the weight of the lamps by 12 times.

The installation of the equipment should be carried out by professionals, and it should also

be installed in places where people can't reach them casually or where no one is free to pass by.

Safety Instructions

Please keep this User Guide for future consultation. If you sell the unit to another user, be sure that they also receive this instruction booklet.

- Unpack and check carefully there is no transportation damage before using the unit.
- Before operating, ensure that the voltage and frequency of power supply match the power requirements of the unit.
- It’s important to ground the yellow/green conductor to earth in order to avoid electric shock.
- The unit is for indoor use.
- The unit must be installed in a location with adequate ventilation, at least 50 cm from adjacent surfaces. Be sure that no ventilation slots are blocked.
- Disconnect main power before replacement or servicing.
- Make sure there are no flammable materials close to the unit while operating as it is fire hazard.
- Use safety cable when fixes this unit. Do not handle the unit by taking its head only, but always by taking its base.
- Maximum ambient temperature is：45℃. Do not operate it where the temperature is higher than this Unit surface temperature may reach up to 85℃. Do not touch the housing bare-hand during its operation. Turn off the power and allow about 15 minutes for the unit to cool down before replacing or serving.
- The event of serious operating problem, stop using the unit immediately. Never try to repair the unit by yourself. Repairs carried out by unskilled people can lead to damage or malfunction. Please contact us for the technical support.

- Do not touch any wire during operation as high voltage might be causing electric shock.

Warning:

- To prevent or reduce the risk of electrical shock or fire, do not expose the unit to rain or moisture.
- Do not open the unit within five minutes after switching off.
- The housing, the lenses, must be replaced if they are visibly damaged.

Caution:

There are no user serviceable parts inside the unit. If the service breaks down, you can contact us directly to teach you how to repair it, or send it back to us and we will send it back to you after it is repaired.

Installation:

The unit should be mounted via its screw holes on the bracket. Always ensure that the unit is firmly fixed to avoid vibration and slipping while operating. And make sure that the structure to which you are attaching the unit is secure and is able to support a weight of 10 times of the unit's weight. Also always use a safety cable that can hold 12 times of the weight of the unit when installing the fixture.

The equipment must be fixed by professionals. And it must be fixed at a place where is out of the touch of people.

Technical Specifications

Light Sources: 12 x 40W 4in1 RGBW LED
Beam Angle: 3.5°~ 45°
Power Consumption: 400W

Power Voltage: AC 100-240V, 50/60Hz
Dimension: 349X259X484mm
Net Weight: 15Kgs
Carton packing 1in1 size:445*355*590mm
Gross weight: 16.7kg
Flight case packing 4in1 size:790*710*670mm
Gross Weight: 96.2kg

Maximum number of connections:

6 units (220V, 50Hz) 1.5mm^2 power cable
3 units (120V, 60Hz) 1.5mm^2 power cable

Control

DMX Channel: 21/25/33/81 Channels
Control Modes: DMX512/Master-Slave/Auto Run/Music

Pan/Tilt

Pan: 540° , accuracy 2.11°/step, fine-tuning accuracy: 0.008°
Tilt: 270° , accuracy 0.86°/step, fine-tuning accuracy: 0.0034°;
Use photoelectric reset system
Display: 1.8 TFT colorful Display
Data In/Out socket: 3-pin XLR sockets
Power Socket: Power Con in/out
Protection Rating: IP65
Work Temperature:-10℃-45℃

Features

Full optical domain dimming, 65536-level dimming accuracy;
Fast strobe 1~25Hz
LED single control, 0~100 linear dimming
A variety of preset built-in color macro function and various graphic macro function; The special lens design can evenly spread color on the whole light

and be used as a wash moving head light, and the lens can be infinitely rotated to create a bee-eye effect.

Mounting

When installing the unit, the trussing or area of installation must be able to hold 10 times the weight without any deformation. When installing the unit must be secured with a secondary safety attachment, e.g. and appropriate safety cable. Never stand directly below the unit when mounting, removing, or servicing the unit.

Overhead mounting requires extensive experience, including calculating working load limits, installation material being used, and periodic safety inspection of all installation material and unit. If you lack these qualifications, do not attempt the installation yourself.
These installation should be checked by a skilled person once a year.

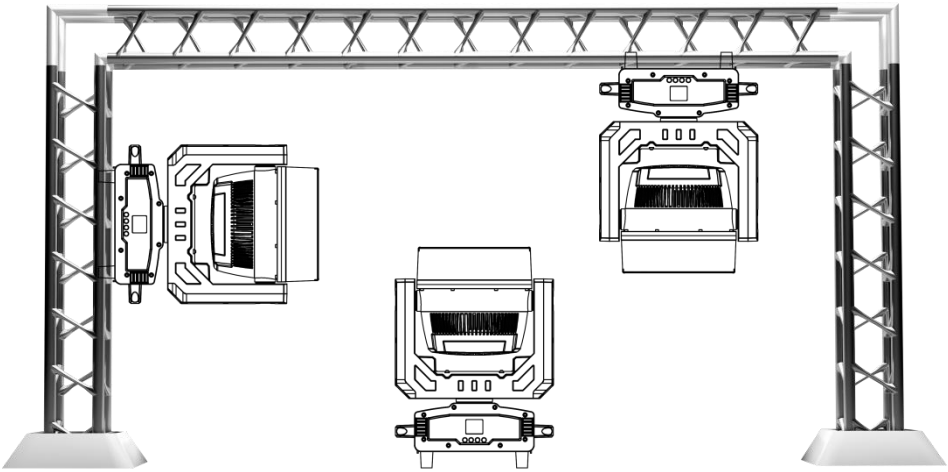

1240BW is fully operational in three different mounting positions, hanging upside-down from a ceiling, sideways on trussing, or set on a flat level surface.

Be sure this fixture is kept at least 12m (40ft) away from any flammable materials (decoration etc.). Always use and install the supplied safety cable as a safety measure to prevent accidental damage and/or injury in the event because of clamp fails (see next page). Never use the carrying handles for secondary attachment.

Mounting

NOTICE: The suitable environmental temperature for this lighting fixture is between -25˚ C to 45˚ C. Do not place this lighting fixture in an environment where the temperatures are under or above the temperatures stated . This will allow the fixture to run at its best and help prolong the fixture life.

1. Bolt each clamp to the Omega holder with screw and lock nut through the hole in the holder.
2. Fasten the omega holders on the bottom of the base by inserting quick-lock fasteners into the holes of the base and tighten fully clockwise.
3. Hang the fixture to the support using the clamps and tighten the screws. Fasten a safety cable through the bottom of the base and over the support.

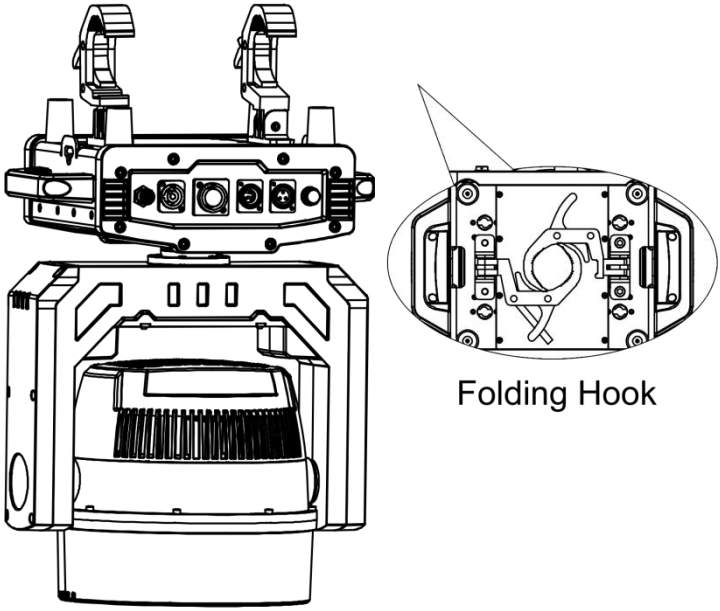

Screw one clamp each via a M12 screw and nut into the Omega holders. Insert the quick-lock fasteners of the Omega holder's into the respective holes on the bottom of the 1240BW. Tighten the quick-lock fasteners fully clockwise. Install the second Omega holder. Pull the safety-cable through the openings located on the base plate and over the trussing system or a safe fixation spot. Insert and tighten the safety screw.

Display and Menu:

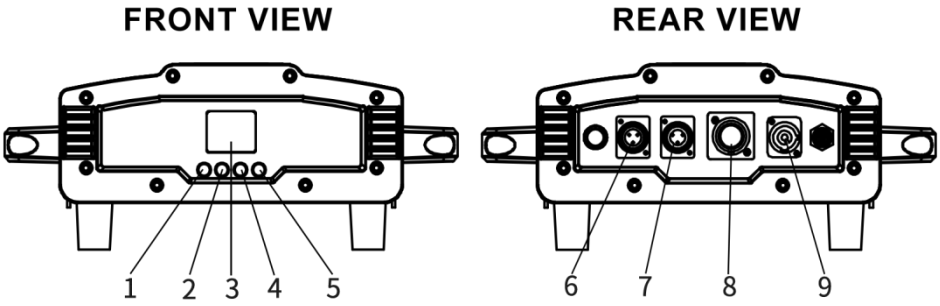

Display:

1. MENU：To select the programming functions.
2. UP：To go forward in the selected functions.
3. DISPLAY：To show the various menus and the selected function.
4. DOWN：To go backward in the selected functions.
5. ENTER：To confirm the selected functions.
6. DMX IN
7. DMX IN
8. POWER IN
9. ON/OFF
10. DMX OUT
11. DMX OUT
12. POWER OUT
13. FUSE

Set DMX Address Code:

- Press **"Menu"** to "Set DMX Address", and press **"ENTER"** keys to enter into.
- Show "Set DMX Address DMX Address:**001**", Press the "**UP and DOWN**" keys to amended.
- Press **"ENTER"** keys to save and Exit, Press the "**MENU"** Keys does not save and Exit.

	1.Pan Degree	1.540	
		2.360	
	2.Mic Sense	001--100	Sound control adjust sensitiveness
	3.Language	1.English	
		2.Chinese	
	4.No Signal	1.Black Out	
		2.Hold	

Menu	5. Fan Set	1. Auto	
		2. Low	
		3. High	
	6.Reset	1.Yes	
		2.No	
	9.Default	1.Yes	
		2.No	
	10.Adjust	Pass Word	****
		1.Pan	Pan fine-adjust
		2.Tilt	Tilt fine-adjust
		3.Focus	Zoom fine-adjust
		4.Rota: 0-255	Rota fine-adjust
		5.Red	Change the value, adjust the white balance
		6.Green	
		7.Blue	
		8.White	
Address	Set address code 001--512		
Reverse	1.Pan	1.Yes	
		2.No	
	2.Tilt	1.Yes	
		2.No	
	3.Display	1.Yes	
		2.No	

<table>
<tr><td rowspan="3">Inform</td><td colspan="2">1.CH Value</td><td>display all channel values</td></tr>
<tr><td colspan="2">2.Temp/℃</td><td>display led board temperature</td></tr>
<tr><td colspan="2">3.Soft v .xxx</td><td>software version number</td></tr>
<tr><td rowspan="14">Mode</td><td colspan="3">1.DMX512</td></tr>
<tr><td colspan="2" rowspan="2">2.Auto</td><td>1.Master</td></tr>
<tr><td>2.Alone</td></tr>
<tr><td colspan="2" rowspan="2">3.Sound</td><td>1.Master</td></tr>
<tr><td>2.Alone</td></tr>
<tr><td rowspan="9">4.Manual</td><td rowspan="5">Master</td><td>1.Pan:0--255</td></tr>
<tr><td>2.Tilt:0--255</td></tr>
<tr><td>3.Focus）:0--255</td></tr>
<tr><td>4.Rota:0-255</td></tr>
<tr><td>5.Red：0--255</td></tr>
<tr><td rowspan="4">Alone</td><td>6.Greed：0--255</td></tr>
<tr><td>7.Bule：0--255</td></tr>
<tr><td>8.White：0--255</td></tr>
<tr><td>9. Strobe：0-255</td></tr>
<tr><td rowspan="4">Channel</td><td colspan="3">1.21Channels</td></tr>
<tr><td colspan="3">2.25Channels</td></tr>
<tr><td colspan="3">3.33Channels</td></tr>
<tr><td colspan="3">4.81Channels</td></tr>
</table>

LUX Data

Beam Angle =3.5°				
R lux	15300	10100	4300	1620
G lux	33400	23400	9300	3520
B lux	6490	4520	1700	643
W lux	42300	29200	11900	4530
4in1 lux	86900	59700	24300	9200
Beam Angle =45°				
R lux	5130	635	215	88
G lux	11300	1340	499	198
B lux	2170	259	99	38
W lux	14100	1760	585	241
4in1 lux	29400	3690	1230	507

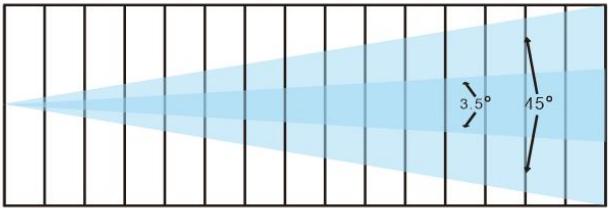

Distance (m)	1	3	5	8
Spot diameter (m) 3.5°	0.32	0.62	0.83	1.14
Spot diameter (m) 45°	1.10	2.80	4.33	

DMX Set Up

Power Supply: The 1240BW contains a automatic voltage switch, which will auto sense the voltage when it is plugged into the power source. With this switch there is no need to worry about the correct power voltage, this unit can be plugged in anywhere.

Data Cable (DMX Cable) Requirements (For DMX Operation): The 1240BW can be controlled via DMX-512 protocol. The 1240BW has 4 DMX channel modes. Your unit and your DMX controller require a standard 3-pin or 5-pin XLR connector for data input and data output (Figure 1). If you are making your own cables, be sure to use standard 110-120 Ohm shielded cable (This cable may be purchased at almost all pro lighting stores). Your cables should be

made with a male and female XLR connector on either end of the cable. Also remember that DMX cable must be daisy chained and cannot be split.

Notice: When making your own cable, be sure to carefully observe and follow the instructions shown in the diagram. Do not use the ground lug on the XLR connector. Do not connect the cable's shield conductor to the ground lug or allow the shield conductor to come in contact with the XLR's outer casing. Grounding the shield could cause a short circuit and erratic behavior.

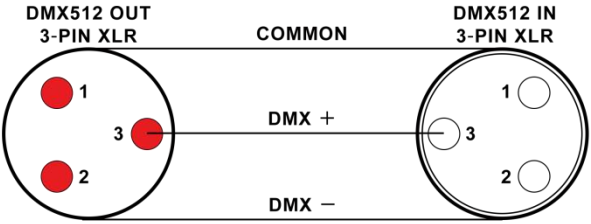

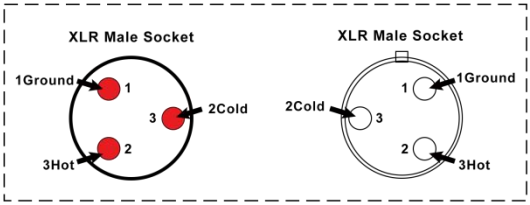

XLR Pin Configuration
pin 1=Ground
pin 2=Data Compliment (negative)
pin 3=Data true (positive)

The DMX512 is widely used in intelligent lighting control, with a DMX 512 controller. connect several lights together, dmx in and dmx out,3 pin XLR connectors: Pin 1: GND, Pin 2: Negative signal (-), Pin 3: Positive signal (+)

DMX Channel List

DMX channel´s functions and values (21 DMX channels):

Channel	Display	Function	Value

CH-1	Red	From dark to bright	0 --- 255
CH-2	Red fine	Red fine adjustment	0 --- 255
CH-3	Green	From dark to bright	0 --- 255
CH-4	Green fine	Green fine adjustment	0 --- 255
CH-5	Blue	From dark to bright	0 --- 255
CH-6	Blue fine	Blue fine adjustment	0 --- 255
CH-7	White	From dark to bright	0 --- 255
CH-8	White fine	White fine adjustment	0 --- 255
CH-9	Color Temperature	No function	0----15
		R 100%, G up, B0%	16----35
		R down, G 100%, B0%	36----55
		R 0%, G 100%, B up	56----75
		R 0%, G down, B 100%	76----95
		R up, G 0%, B100%	96----115
		R 100%, G 0%, B down	116----135
		R 100%, G up, B up	136----155
		R down, G down, B 100%	156----175
		R100%G100%B100%W100%	176----195
		2800K	196----200
		3200K	201----205

		4000K	206----210
		4500K	211----215
		5000K	216----220
		5600K	221----225
		6500K	226----230
		7000K	231----235
		7500K	236----240
		8000K	241----255
CH-10	Macro Color	No function	0 --- 19
		Effect -1	10--19
		Effect -2	20--29
		10 numbers 1 effect	……
		Effect -24	240--249
		Effect -25	250 --- 255
CH-11	Dimming	From dark to bright	0 --- 255
CH-12	Dimming adjustment	Dimming fine adjustment	0 --- 255
CH-13	Strobe	Turn on the light	0 --- 3
		From slow to fast	4 --- 203
		Random strobe	204 --- 255
CH-14	Pan	Pan control	0 --- 255

CH-15	Pan adjustment	Pan fine adjustment	0 --- 255
CH-16	Tilt	Tilt control	0 --- 255
CH-17	Tilt adjustment	Tilt fine adjustment	0 --- 255
CH-18	Zoom	Zoom	0-255
CH-19	Lens rotation	0~60°	0-155
		Clockwise infinite rotation	156-205
		Counterclockwise rotation	206-255
CH-20	Dimming Mode	Mode -1	0 --- 49
		Mode -2	50 --- 99
		Mode -3	100---149
		Mode -4	150---255
CH-21	Reset	NO funtion	0-250
		Reset within 5s	251---255

DMX channel´s functions and values (25 DMX channels):

Channel	**Display**	**Function**	**Value**
CH-1	Pan	Pan control	0 --- 255
CH-2	Pan adjustment	Pan fine adjustment	0 --- 255
CH-3	Tilt	Tilt control	0 --- 255
CH-4	Tilt adjustment	Tilt fine adjustment	0 --- 255

CH-5	Pan/Tilt speed	Speed from fast to slow	0 --- 255
CH-6	Zoom	Angle from small to large	0 --- 255
CH-7	Lens rotation	0~60°	0-155
		Clockwise infinite rotation from fast to slow	156-205
		Counterclockwise rotation from slow to fast	206-255
CH-8	Dimmer	dark to bright linear dimming	0 --- 255
CH-9	Strobe	Turn on the light	0---3
		Synchro strobe speed From slow to fast (1HZ-25HZ)	4---203
		Random strobe	204--255
CH-10	R dimming	dark to bright linear dimming	0-255
CH-11	G dimming	dark to bright linear dimming	0-255
CH-12	B dimming	dark to bright linear dimming	0-255
CH-13	W dimming	dark to bright linear dimming	0-255
		No funtion	0 ---15
		R 100%, G up, B0%	16---35
		R down, G 100%, B0%	36---55
		R 0%, G 100%, B up	56---75

CH-14	Color temperature	R 0%, G down, B 100%	76---95
		R up, G 0%, B100%	96---115
		R 100%, G 0%, B down	116---135
		R 100%, G up, B up	136---155
		R down, G down, B 100%	156---175
		R100%G100%B100%W100%	176---195
		2800K	196---200
		3200K	201---205
		4000K	206---210
		4500K	211---215
		5000K	216---220
		5600K	221---225
		6500K	226--230
CH-14	Color temperature	7000K	231--235
		7500K	236--240
		8000K	241--255
CH-15	Macro color	No funtion	0--9
		Macro color 1	10--19
		Macro color 2	20--29

		…… (10 numbers 1 macro color)	.....
		Macro color 24	240--249
		Macro color 25	250--255
CH-16	Static pattern	No funtion	0--16
		Monochrome pattern 1	17--33
		Monochrome pattern 2	34--50
		.....(17 numbers 1 pattern)	.....
		Monochrome pattern 9	153--169
		Mixed color pattern 1	170--186
		Mixed color pattern 2	187--203
CH-16	Static pattern	Mixed color pattern 3	204--220
		Mixed color pattern 4	221--237
		Mixed color pattern 5	238--255
CH-17	Dynamic pattern	No funtion	0--9
		Monochrome dynamic pattern 1	10--13
		Monochrome dynamic pattern 2	14--17
		.....(4 numbers 1 pattern)	.....
		Monochrome pattern 46	190--193
		Mixed color dynamic pattern 1	194--197
		Mixed color dynamic pattern 2	198--201

		.....(4 numbers 1 pattern)	.....
		Mixed color dynamic pattern 14	246--249
		Mixed color dynamic pattern 15	250--255
CH-18	Pattern movement	Choose pattern dynamic scene （with 17CH）	0-255
CH-19	Dynamic pattern speed	No funtion	0--9
		Forward, from fast to slow（with 17CH）	10--132
CH-19		Reverse, from slow to fast (with 17CH)	133--255
CH-20	Back color R	dark to bright linear dimming	0-255
CH-21	Back color G	dark to bright linear dimming	0-255
CH-22	Back color B	dark to bright linear dimming	0-255
CH-23	Back color W	dark to bright linear dimming	0-255
CH-24	Dimming Mode	Mode -1	0 --- 49
		Mode -2	50 --- 99
		Mode -3	100---149
		Mode -4	150---255
CH-25	Reset	No funtion	0-250
		Reset within 5s	251-255

DMX channel´s functions and values (33 DMX channels):

Channel	Display	Function	Value
CH-1	Pan	Pan control	0 --- 255
CH-2	Pan adjustment	Pan fine adjustment	0 --- 255
CH-3	Tilt	Tilt control	0 --- 255
CH-4	Tilt adjustment	Tilt fine adjustment	0 --- 255
CH-5	Pan/Tilt speed	Speed from fast to slow	0 --- 255
CH-6	Zoom	Angle from small to large	0 --- 255
CH-7	Lens rotation	0~60°	0-155
		Clockwise infinite rotation from fast to slow	156-205
		Counterclockwise rotation from slow to fast	206-255
CH-8	Dimmer	dark to bright linear dimming	0 --- 255
CH-9	Dimmer adjustment	Dimming fine adjustment	0 --- 255
CH-10	Strobe	Turn on the light	0---3
		Synchro strobe speed From slow to fast (1HZ-25HZ)	4---203
		Random strobe	204--255

CH-11	Red	From dark to bright	0 --- 255
CH-12	Red adjustment	Red fine adjustment	0 --- 255
CH-13	Green	From dark to bright	0 --- 255
CH-14	Green adjustment	Green fine adjustment	0 --- 255
CH-15	Blue	From dark to bright	0 --- 255
CH-16	Blue adjustment	Blue fine adjustment	0 --- 255
CH-17	White	From dark to bright	0 --- 255
CH-18	White adjustment	White fine adjustment	0 --- 255
CH-19	Dimming Mode	Mode -1	0 --- 49
		Mode -2	50 --- 99
		Mode -3	100---149
		Mode -4	150---255
		No funtion	0 ---15
		R 100%, G up, B0%	16---35
		R down, G 100%, B0%	36---55
		R 0%, G 100%, B up	56---75
		R 0%, G down, B 100%	76---95

CH-20	Color temperature	R up, G 0%, B100%	96---115
		R 100%, G 0%, B down	116---135
		R 100%, G up, B up	136---155
		R down, G down, B 100%	156---175
		R100%G100%B100%W100%	176---195
		2800K	196---200
		3200K	201---205
		4000K	206---210
		4500K	211---215
CH-20	Color temperature	5000K	216---220
		5600K	221---225
		6500K	226--230
		7000K	231--235
		7500K	236--240
		8000K	241--255

CH-21	Macro color	No funtion	0--9
		Macro color 1	10--19
		Macro color 2	20--29
		……(10 numbers 1 macro color)	....
		Macro color 24	240--249
		Macro color 25	250--255
CH-22	Static pattern	No funtion	0--16
		Monochrome pattern 1	17--33
		Monochrome pattern 2	34--50
		.....(17 numbers 1 pattern)	.....
		Monochrome pattern 9	153--169
		Mixed color pattern 1	170--186
		Mixed color pattern 2	187--203
		Mixed color pattern 3	204--220
		Mixed color pattern 4	221--237
		Mixed color pattern 5	238--255
CH-23	Dynamic pattern	No funtion	0--9
		Monochrome dynamic pattern 1	10--13
		Monochrome dynamic pattern 2	14--17
		.....(4 numbers 1 pattern)	.....

		Monochrome pattern 46	190--193
		Mixed color dynamic pattern 1	194--197
		Mixed color dynamic pattern 2	198--201
		.....(4 numbers 1 pattern)	.....
		Mixed color dynamic pattern 14	246--249
		Mixed color dynamic pattern 15	250--255
CH-24	Pattern movement	Choose pattern dynamic scene （with 17CH）	0-255
CH-25	Dynamic pattern speed	No funtion	0--9
		Forward, from fast to slow（with 17CH）	10--132
		Reverse, from slow to fast (with 17CH)	133--255
CH-26	Pattern fade effect	Pattern effect fade	0-255
CH-27	Background dimming	Background 0-100% dimming	0-255
CH-29	Back color R	dark to bright linear dimming	0-255
CH-30	Back color G	dark to bright linear dimming	0-255
CH-31	Back color B	dark to bright linear dimming	0-255
CH-32	Back color W	dark to bright linear dimming	0-255
CH-33	Reset	No funtion	0-250

		Reset within 5s	251-255

DMX channel´s functions and values (81 DMX channels):

Channel	Display	Function	Value
CH-1	Pan	Pan control	0 --- 255
CH-2	Pan adjustment	Pan fine adjustment	0 --- 255
CH-3	Tilt	Tilt control	0 --- 255
CH-4	Tilt adjustment	Tilt fine adjustment	0 --- 255
CH-5	Pan/Tilt speed	Speed from fast to slow	0 --- 255
CH-6	Zoom	Angle from small to large	0 --- 255
CH-7	Lens rotation	0~60°	0-155
		Clockwise infinite rotation from fast to slow	156-205
		Counterclockwise rotation from slow to fast	206-255
CH-8	Dimmer	dark to bright linear dimming	0 --- 255
CH-9	Dimmer adjustment	Dimming fine adjustment	0 --- 255
CH-10	Strobe	Turn on the light	0---3

		Synchro strobe speed From slow to fast (1HZ-25HZ)	4---203
		Random strobe	204--255
CH-11	Red	From dark to bright	0 --- 255
CH-12	Red adjustment	Red fine adjustment	0 --- 255
CH-13	Green	From dark to bright	0 --- 255
CH-14	Green adjustment	Green fine adjustment	0 --- 255
CH-15	Blue	From dark to bright	0 --- 255
CH-16	Blue adjustment	Blue fine adjustment	0 --- 255
CH-17	White	From dark to bright	0 --- 255
CH-18	White adjustment	White fine adjustment	0 --- 255
CH-19	Dimming Mode	Mode -1	0 --- 49
		Mode -2	50 --- 99
		Mode -3	100---149
		Mode -4	150---255
		No funtion	0 ---15
		R 100%, G up, B0%	16---35
		R down, G 100%, B0%	36---55
		R 0%, G 100%, B up	56---75
		R 0%, G down, B 100%	76---95

CH-20	Color temperature	R up, G 0%, B100%	96---115
		R 100%, G 0%, B down	116---135
		R 100%, G up, B up	136---155
		R down, G down, B 100%	156---175
		R100%G100%B100%W100%	176---195
		2800K	196---200
		3200K	201---205
		4000K	206---210
		4500K	211---215
CH-20	Color temperature	5000K	216---220
		5600K	221---225
		6500K	226--230
		7000K	231--235
		7500K	236--240
		8000K	241--255
CH-21	Macro color	No funtion	0--9
		Macro color 1	10--19
		Macro color 2	20--29
		…(10 numbers 1 macro color)	....
		Macro color 24	240--249

		Macro color 25	250--255
CH-22	Static pattern	No funtion	0--16
		Monochrome pattern 1	17--33
		Monochrome pattern 2	34--50
		.....(17 numbers 1 pattern)	.....
		Monochrome pattern 9	153--169
		Mixed color pattern 1	170--186
		Mixed color pattern 2	187--203
		Mixed color pattern 3	204--220
		Mixed color pattern 4	221--237
		Mixed color pattern 5	238--255
CH-23	Dynamic pattern	No funtion	0--9
		Monochrome dynamic pattern 1	10--13
		Monochrome dynamic pattern 2	14--17
		.....(4 numbers 1 pattern)	.....
		Monochrome pattern 46	190--193
		Mixed color dynamic pattern 1	194--197
		Mixed color dynamic pattern 2	198--201
		.....(4 numbers 1 pattern)	.....

		Mixed color dynamic pattern 14	246--249
		Mixed color dynamic pattern 15	250--255
CH-24	Pattern movement	Choose pattern dynamic scene （with 23CH）	0-255
CH-25	Dynamic pattern speed	No funtion	0--9
		Forward, from fast to slow（with 23CH）	10--132
		Reverse, from slow to fast (with 23CH)	133--255
CH-26	Pattern fade effect	Pattern effect fade	0-255
CH-27	Background dimming	Background 0-100% dimming	0-255
CH-29	Back color R	dark to bright linear dimming	0-255
CH-30	Back color G	dark to bright linear dimming	0-255
CH-31	Back color B	dark to bright linear dimming	0-255
CH-32	Back color W	dark to bright linear dimming	0-255
CH-33	Reset	No funtion	0-250
		Reset within 5s	251-255
CH-34	R1 LED dimming	R1 LED dimming	0-255
CH-35	G1 LED dimming	G1 LED dimming	0-255
CH-36	B1 LED dimming	B1 LED dimming	0-255

CH-37	W1 LED dimming	W1 LED dimming	0-255
.....	.....	.....	.....
CH-78	R12 LED dimming	R12 LED dimming	0-255
CH-79	G12LED dimming	G12 LED dimming	0-255
CH-80	B12LED dimming	B12 LED dimming	0-255
CH-81	W12LED dimming	W12 LED dimming	0-255

Attention

- When the lamp is powered on and lit, try to avoid looking directly at the light emitted by the lamp beads.
- When loading or unloading the lamp, be sure to cut off the main power supply connected to the device before you can open the cover on which the lamp bead is installed.

Trouble Shooting

Following are a few common problems that may occur during operation. Here are some suggestions for easy troubleshooting:

A. The unit does not work, no light and the fan does not work

1. Check the connection of power and main fuse.
2. Measure the mains voltage on the main connector.
3. Check the power on LED.

B. Not responding to DMX controller

1. DMX LED should be on. If not, check DMX connectors, cables to see if link properly.
2. If the DMX LED is on and no response to the channel, check the address settings and DMX polarity.
3. If you have intermittent DMX signal problems, check the pins on connectors or on PCB of the unit or the previous one.
4. Try to use another DMX controller.
5. Check if the DMX cables run near or run alongside to high voltage cables that may cause damage or interference to DMX interface circuit.

C. One of the channels is not working well

1. The stepper motor might be damaged or the cable connected to the PCB is broken.
2. The motor's drive IC on the PCB might be out of condition.

Products Size

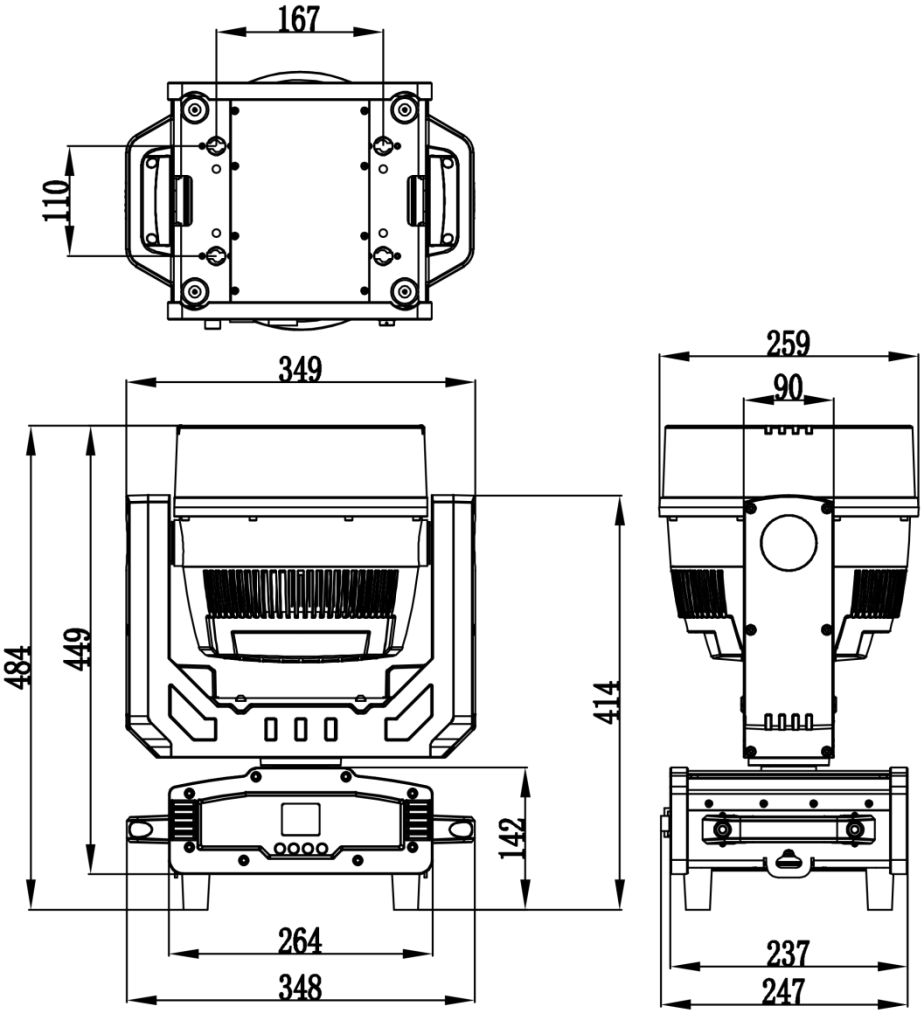

Fixture Cleaning

The outside of the lens must always be wiped so that the lighting effect is better. Wipe frequency according to the environment. Humidity, excessive smoke, and a particularly dirty environment can make the lens dusty.

- Use a soft cloth and special glass cleaner.
- Wipe the exterior of the lens at least every 30 days.
- Use vacuum cleaners or air guns inside the luminaire and clean it at least twice a year.
- Always be sure to dry all parts completely before plugging the unit back in.

Multiple Unit Power Linking

With this feature you can connect the fixtures to one another using the power-con input and output sockets. The maximum that can be connected is 3 fixtures @ 120V and 7 fixtures @ 240V. After the maximum connected fixtures you will need to use a new power outlet.

NOTE: USE WITH CAUTION WHEN POWER LINKING OTHER FIXTURES TO THE 1240BW AS THE POWER CONSUMPTION OF OTHER LIGHTING FIXTURES WILL VARY!

Fuse Replacement

Unplug the unit from any power source it may be connected to. Once the power has been disconnected, use a Phillips head screw driver to unscrew the fuse holder located next to the power-con input.

Remove the bad fuse and replace with a new one, and screw the fuse holder back in.