760BW

IP65 7*60w Bee eye Zoom Moving Head

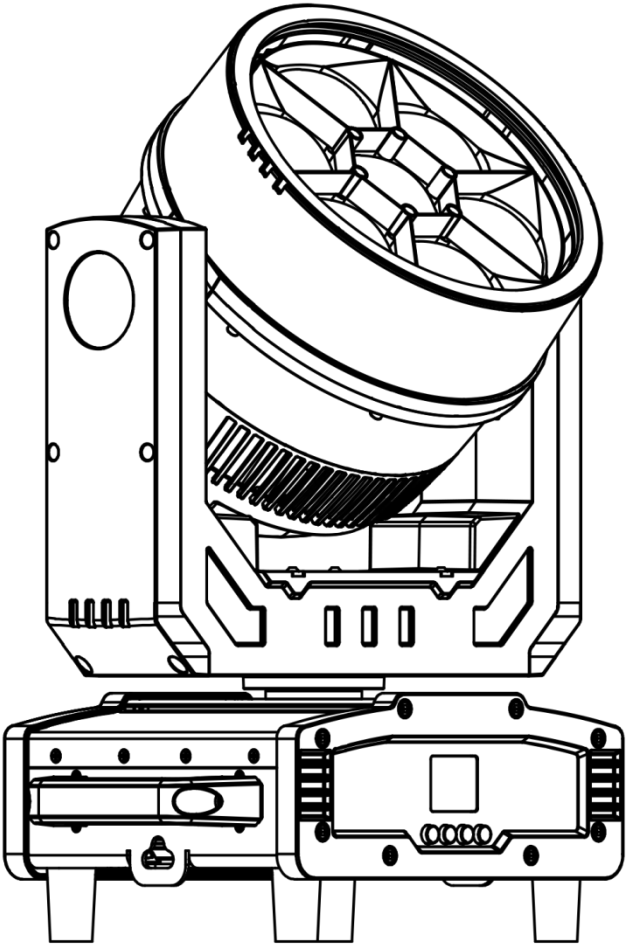

USER MANUAL

CONTENTS

Safety Instructions 3-4

Technical Specification 4-5

Mounting 6-7

Display and Menu 8-10

LUX Data…….....……11

DMX Set Up 11-12

DMX Channel List 13-49

Attention 50

Trouble Shooting 51-52

Products Size 52

Fixture Cleaning 51-52

Multiple Unit Power Linking 52

Fuse Replacement 52

Statement

Fixtures should be fastened on the hooks with screws. Make sure the installation is secure to prevent chattering and slipping during operation. Also make sure that the structure of the connected luminaire can support the luminaire 10 times the weight. At the same time, when installing the lamps, they also use a safety rope to support the weight of the lamps by 12 times.

The installation of the equipment should be carried out by professionals, and it should also

be installed in places where people can't reach them casually or where no one is free to pass by.

Safety Instructions

Please keep this User Guide for future consultation. If you sell the unit to another user, be sure that they also receive this instruction booklet.

- Unpack and check carefully there is no transportation damage before using the unit.
- Before operating, ensure that the voltage and frequency of power supply match the power requirements of the unit.
- It’s important to ground the yellow/green conductor to earth in order to avoid electric shock.
- The unit is for indoor use.
- The unit must be installed in a location with adequate ventilation, at least 50 cm from adjacent surfaces. Be sure that no ventilation slots are blocked.
- Disconnect main power before replacement or servicing.
- Make sure there are no flammable materials close to the unit while operating as it is fire hazard.
- Use safety cable when fixes this unit. Do not handle the unit by taking its head only, but always by taking its base.
- Maximum ambient temperature is：45℃. Do not operate it where the temperature is higher than this Unit surface temperature may reach up to 85℃. Do not touch the housing bare-hand during its operation. Turn off the power and allow about 15 minutes for the unit to cool down before replacing or serving.
- The event of serious operating problem, stop using the unit immediately. Never try to repair the unit by yourself. Repairs carried out by unskilled people can lead to damage or malfunction. Please contact us for the technical support.
- Do not touch any wire during operation as high voltage might be causing

electric shock.

Warning:

- To prevent or reduce the risk of electrical shock or fire, do not expose the unit to rain or moisture.
- Do not open the unit within five minutes after switching off.
- The housing, the lenses, must be replaced if they are visibly damaged.

Caution:

There are no user serviceable parts inside the unit. If the service breaks down, you can contact us directly to teach you how to repair it, or send it back to us and we will send it back to you after it is repaired.

Installation:

The unit should be mounted via its screw holes on the bracket. Always ensure that the unit is firmly fixed to avoid vibration and slipping while operating. And make sure that the structure to which you are attaching the unit is secure and is able to support a weight of 10 times of the unit's weight. Also always use a safety cable that can hold 12 times of the weight of the unit when installing the fixture.

The equipment must be fixed by professionals. And it must be fixed at a place where is out of the touch of people.

Technical Specifications

Light Sources: 7*60W 4IN1 RGBW LED

Beam Angle:3.5°- 45°

Power Consumption: 410w

Power Voltage: AC 100-240V, 50/60Hz
Dimension：349*247*484mm
Net Weight:14.5 kgs
Carton packing 1in1 size:445*355*590mm
Gross weight: 16.7kg
Flight case packing 4in1 size:790*710*670mm
Gross Weight: 96.6kg

Control
DMX Channel: 21/23/35/42/49/51/56Channels
Control Modes: DMX512/Master-Slave/Auto Run/Music
Pan/Tilt
Pan: 540°, accuracy 2.11°/step, fine-tuning accuracy: 0.008°
Tilt: 270°, accuracy 0.86°/step, fine-tuning accuracy: 0.0034°;
Use photoelectric reset system
Construction
Display:180° reversible TFT Display
Data In/Out socket: 3-pin XLR sockets or 5pin XIL sockets(optional)
Power Socket: IP65 Powercon in/out
Protection Rating: IP65
Features
LED single control
Outstanding color macro effect
Fast, quite operation and flicker free
High-efficiency optical system ,wonderful flower effect plus zoom
Led temperature protection & Fan run speed automatic based on the head temperature.

Mounting

When installing the unit, the trussing or area of installation must be able to hold 10 times the weight without any deformation. When installing the unit must be secured with a secondary safety attachment, e.g. and appropriate safety cable. Never stand directly below the unit when mounting, removing, or servicing the unit.

Overhead mounting requires extensive experience, including calculating working load limits, installation material being used, and periodic safety inspection of all installation material and unit. If you lack these qualifications, do not attempt the installation yourself.
These installation should be checked by a skilled person once a year.

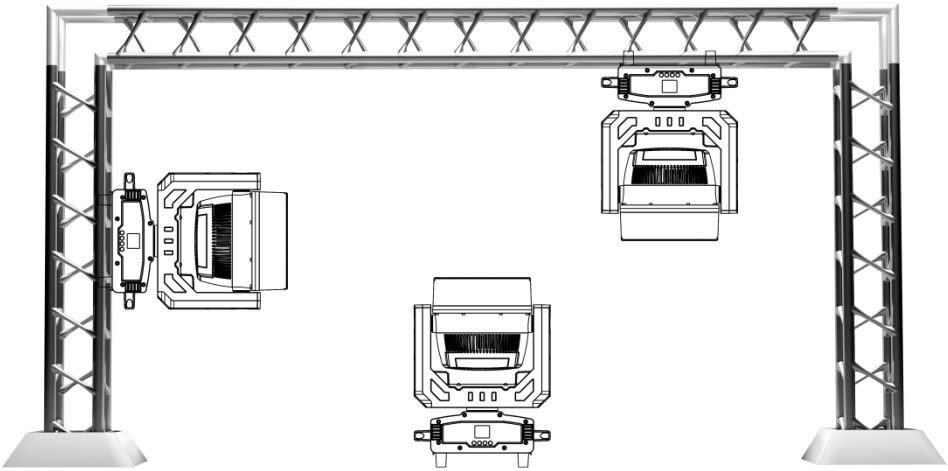

760BW is fully operational in three different mounting positions, hanging upside-down from a ceiling, sideways on trussing, or set on a flat level surface. Be sure this fixture is kept at least 12m (40ft) away from any flammable materials
(decoration etc.). Always use and install the supplied safety cable as a safety measure to prevent accidental damage and/or injury in the event because of clamp fails (see next page). Never use the carrying handles for secondary attachment.

Mounting

NOTICE: The suitable environmental temperature for this lighting fixture is between -25˚ C to 45˚ C. Do not place this lighting fixture in an environment where the temperatures are under or above the temperatures stated . This will allow the fixture to run at its best and help prolong the fixture life.

1. Bolt each clamp to the Omega holder with screw and lock nut through the hole in the holder.
2. Fasten the omega holders on the bottom of the base by inserting quick-lock fasteners into the holes of the base and tighten fully clockwise.
3. Hang the fixture to the support using the clamps and tighten the screws. Fasten a safety cable through the bottom of the base and over the support.

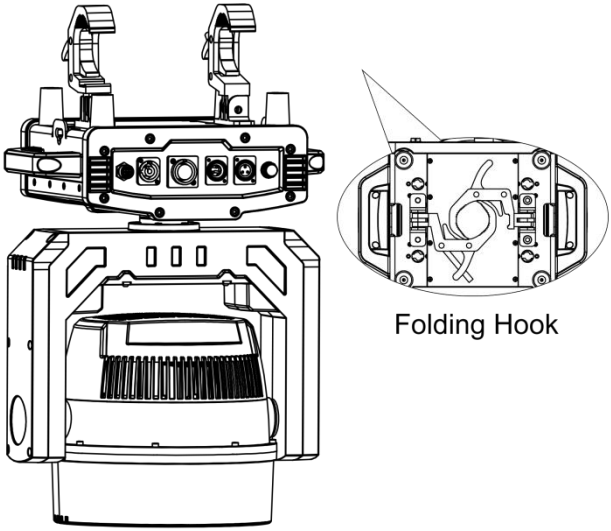

Screw one clamp each via a M12 screw and nut into the Omega holders. Insert the quick-lock fasteners of the Omega holder's into the respective holes on the bottom of the 760BW. Tighten the quick-lock fasteners fully clockwise. Install the second Omega holder. Pull the safety-cable through the openings located on the base plate and over the trussing system or a safe fixation spot. Insert and tighten the safety screw.

Display and Menu

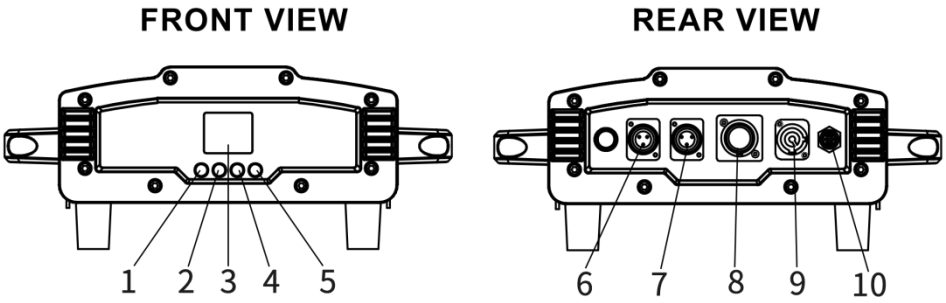

Display:

1. MENU：To select the programming functions.
2. UP：To go forward in the selected functions.
3. DISPLAY：To show the various menus and the selected function.
4. DOWN：To go backward in the selected functions.
5. ENTER：To confirm the selected functions.
6. DMX IN
7. DMX IN
8. POWER IN
9. ON/OFF
10. DMX OUT
11. DMX OUT
12. POWER OUT
13. FUSE

Set DMX Address Code:

- Press **"Menu"** to "Set DMX Address", and press **"ENTER"** keys to enter into.
- Show "Set DMX Address DMX Address:**001**", Press the "**UP and DOWN**" keys to amended.
- Press **"ENTER"** keys to save and Exit, Press the "**MENU"** Keys does not save and Exit.

Menu	Pan Degree	1) 540 °, 2)360°	X-axis running angle selection
	Mic Sense	001 - 100	Sound sensitivity adjustment
	Language	English	Chinese
	Reset	Yes	No
	Default	Yes	No
		Pass Word: ****	
		Pan	0 - 255
		Tilt	0 - 255

	Adjust	Focus	0 - 255
		Rota	0 - 255
		Red	0 - 255
		Green	0 - 255
		Blue	0 - 255
		White	0 - 255
Address	Setting from 001 - 512		
Reverse	Forward or reversed setting	Pan	1.Yes
			2.No
		Tilt	1.Yes
			2.No
		Display	1.Yes
			2.No
Information		1.CH Value	Each channel show CH value
		2.Temp ____℃	Show the temperature of led board
		3.Soft V1.1	Show the version number
		21 channels	
		23 channels	
		35 channels	
		42 channels	

Channel	49 channels		
	51 channels		
	56channels		
	DMX 512		
Mode	AUTO		
	SOUND		
Manual	Master	Pan:0--255	Manual Control
		Tilt:0--255	
		Focus:0--255	
		Rota:0-255	
	Alone	Red：0--255	
		Greed：0--255	
		Blue：0--255	
		White：0--255	
		Strobe：0-255	

LUX Data

Zoom range = 3.5°				
R lux	13600	11900	4460	1920
G lux	40300	33800	12400	5320
B lux	8400	6150	2310	1000
W lux	53600	39800	14600	6350
4in1 lux	109000	85300	31500	13600

Zoom range = 45°				
R lux	5360	716	270	123
G lux	16000	2180	814	364
B lux	3180	435	162	71
W lux	19500	2660	890	443
4in1 lux	412000	5580	2090	935

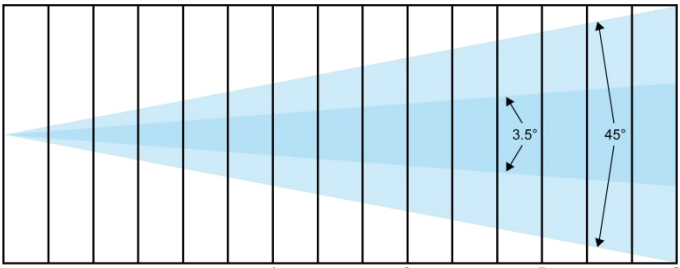

Distance(m)	1	3	5	8
Spot diameter (m) 3.5°	0.28	0.50	0.66	1.00
Spot diameter (m) 45°	0.85	2.15	3.4	

DMX Set Up

Power Supply: The 760BW contains a automatic voltage switch, which will auto sense the voltage when it is plugged into the power source. With this switch there is no need to worry about the correct power voltage, this unit can be plugged in anywhere.

Data Cable (DMX Cable) Requirements (For DMX Operation): The 760BW can be controlled via DMX-512 protocol. The 760BW has 7 DMX channel modes. Your unit and your DMX controller require a standard 3-pin or 5-pin XLR connector for data input and data output (Figure 1). If you are making your

own cables, be sure to use standard 110-120 Ohm shielded cable (This cable may be purchased at almost all pro lighting stores). Your cables should be made with a male and female XLR connector on either end of the cable. Also remember that DMX cable must be daisy chained and cannot be split.

Notice: When making your own cable, be sure to carefully observe and follow the instructions shown in the diagram. Do not use the ground lug on the XLR connector. Do not connect the cable's shield conductor to the ground lug or allow the shield conductor to come in contact with the XLR's outer casing. Grounding the shield could cause a short circuit and erratic behavior.

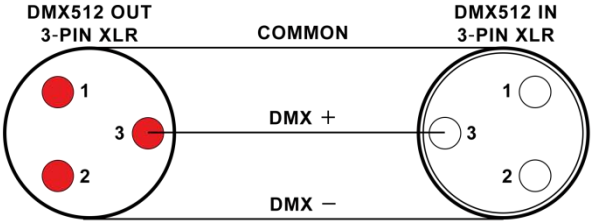

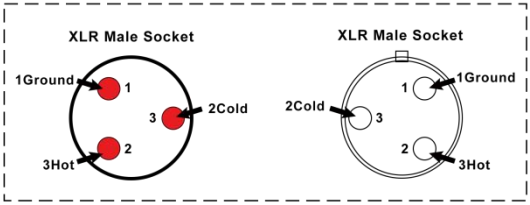

XLR Pin Configuration
pin 1=Ground
pin 2=Data Compliment (negative)
pin 3=Data true (positive)

The DMX512 is widely used in intelligent lighting control, with a DMX 512 controller. connect several lights together, dmx in and dmx out,3 pin XLR connectors: Pin 1: GND, Pin 2: Negative signal (-), Pin 3: Positive signal (+)

DMX Channel List

DMX channel´s functions and values (21 DMX channels):

Channel	Display	Function	Value
CH-1	Red	Red dimming	0 --- 255
CH-2	Red adjustment	Red adjustment	0 --- 255
CH-3	Green	Green dimming	0 --- 255
CH-4	Green adjustment	Green adjustment	0 --- 255
CH-5	Blue	Blue dimming	0 --- 255
CH-6	Blue adjustment	Blue dimming	0 --- 255
CH-7	White	White dimming	0 --- 255
CH-8	White adjustment	White adjustment	0 --- 255
		No	0--15
		R100%, G UP,B0%	16--35
		R DOWM, G100%, B0%	36--55
		R0%, G100%, B UP	56--75
		R0%, G DOWM, B100%	76--95

CH-9	Color temperature	R UP, G0%, B100%	96--115
		R100%, G0%, B DOWM	116--135
		R100%, G UP, B UP	136--155
		R DOWM, G DOWM, B 100%	156--175
		R100%G100%B100%W100%	176--195
CH-9	Color temperature	2800K	196--200
		3200K	201--205
		3500K	206--210
		4000K	211--215
		4500K	216--220
		5000K	221--225
		5500K	226--230
		6000K	231--235
		6500K	236--240
		7000K	241--245

		7500K	246--250
		8000K	251--255
CH-10	Macro color	No	0--9
		Macro color 1	10--23
		Macro color 2	24--37
		....	....
		Macro color 16	234--247
		Macro color 17	248--255
CH-11	Strobe	Turn on the light	0---3
		Synchro strobe speed slow to fast (1HZ-25HZ)	4---203
		Random strobe	204--255
CH-12	Dimmer	dark to bright linear dimming	0 --- 255
CH-13	Dimmer adjust	Dimmer adjustment control	0 --- 255
CH-14	Pan	Pan control	0 --- 255

CH-15	Pan adjustment	Pan adjustment control	0 --- 255
CH-16	Tilt	Tilt control	0 --- 255
CH-17	Tilt adjustment	Tilt adjustment control	0 --- 255
CH-18	Dimming Mode	Mode -1	0 --- 49
		Mode -2	50 --- 99
		Mode -3	100---149
		Mode -4	150---255
CH-19	Reset	NO	0-250
		Reset within 5s	251---255
CH-20	Zoom	Zoom	0-255
CH-21	Lens rotation	0~60°	0-155
		Clockwise infinite rotation	156-205
		Counterclockwise rotation	206-255

DMX channel´s functions and values (23 DMX channels):

Channel	Display	Function	Value
CH-1	Pan	0-540°	0 --- 255
CH-2	Pan adjustment	16bit adjustment	0 --- 255
CH-3	Tilt	0-205°	0 --- 255
CH-4	Tilt adjustment	16bit adjustment	0 --- 255
CH-5	Pan Tilt speed	Speed from fast to slow	0 --- 255
CH-6	Zoom	Angle from small to large	0 --- 255
CH-7 CH-7	Lens rotation Lens rotation	0~60°	0-155
		Clockwise infinite rotation from fast to slow	156-205
		Counterclockwise rotation from slow to fast	206-255
CH-8	Dimmer	dark to bright linear dimming	0 --- 255
CH-9	Strobe	Synchro strobe speed From slow to fast (1HZ-25HZ)	4---203
		Random strobe	204--255

CH-10	R dimming	dark to bright linear dimming	0-255
CH-11	G dimming	dark to bright linear dimming	0-255
CH-12	B dimming	dark to bright linear dimming	0-255
CH-13	W dimming	dark to bright linear dimming	0-255
CH-14	Color temperature	No	0 ---15
		R100%, G UP, B0%	16---35
		R DOWM, G100%, B0%	36---55
		R0%, G100%, B UP	56---75
		R0%, G DOWM, B100%	76---95
		R UP, G0%,B100%	96---115
		R100%, G0%, B DOWM	116---135
		R100%, G UP, B UP	136---155
		R DOWM, G DOWM, B 100%	156---175
		R100%, G100%, B100%, W100%	176---195

CH-14	Color temperature	2800K	196---200
		3200K	201---205
		3500K	206---210
		4000K	211---215
		4500K	216---220
		5000K	221---225
		5500K	226--230
		6000K	231--235
		6500K	236--240
		7000K	241--245
		7500K	246--250
		8000K	251--255
CH-15	Macro color	No	0--9
		Macro color 1	10--23
		Macro color 2	24--37

		....	....
		Macro color 16	234--247
		Macro color 17	248--255
CH-16	Static pattern	No	0--9
		Monochrome pattern 1	10--19
		Monochrome pattern 2	20--29
		.....	.....
		Monochrome pattern 12	120--129
		Mixed color pattern 1	130--145
		Mixed color pattern 2	146--161
		....	....
		Mixed color pattern 7	226--241
		Mixed color pattern 8	242--255
		NO	0--9
		Monochrome dynamic pattern 1	10--17

CH-17	Dynamic pattern	Monochrome dynamic pattern 2	18--25
		.....	.....
		Monochrome pattern 21	170--177
		Mixed color dynamic pattern 1	178--185
		Mixed color dynamic pattern 2	186--193
		.....	.....
		Mixed color dynamic pattern 9	242--249
		Mixed color dynamic pattern 10	250--255
CH-18	Dynamic pattern speed	Forward, from fast to slow（with 17CH）	0--127
		Reverse, from slow to fast (with 17CH)	128--255
CH-19	Back color R	dark to bright linear dimming	0-255
CH-20	Back color G	dark to bright linear dimming	0-255
CH-21	Back color B	dark to bright linear dimming	0-255
CH-22	Back color W	dark to bright linear dimming	0-255

CH-23	Reset	NO	0-250
		Reset within 5s	251--255

DMX channel´s functions and values (35 DMX channels):

Channel	Display	Function	Value
CH-1	Red	Red dimming	0 --- 255
CH-2	Red adjustment	Red adjustment	0 --- 255
CH-3	Green	Green dimming	0 --- 255
CH-4	Green adjustment	Green adjustment	0 --- 255
CH-5	Blue	Blue dimming	0 --- 255
CH-6	Blue adjustment	Blue dimming	0 --- 255
CH-7	White	White dimming	0 --- 255
CH-8	White adjustment	White adjustment	0 --- 255
		No	0 ---15
		R100%, G UP, B0%	16---35

CH-9	Color temperature	R DOWM, G100%, B0%	36---55
		R0%, G100%, B UP	56---75
		R0%, G DOWM, B100%	76---95
		R UP, G0%, B100%	96---115
		R100%, G0%, B DOWM	116--135
		R100%, G UP, B UP	136---155
		R DOWM, G DOWM, B 100%	156---175
		R 100%, G 100%, B 100%, W 100%	176---195
		2800K	196---200
		3200K	201---205
		3500K	206---210
		4000K	211---215
		4500K	216---220
		5000K	221---225

CH-9	Color temperature	5500K	226--230
		6000K	231--235
		6500K	236--240
		7000K	241--245
		7500K	246--250
		8000K	251--255
CH-10	Macro color	No	0--9
		Macro color 1	10--23
		Macro color 2	24--37
		....	....
		Macro color 16	234--247
CH-10	Macro color	Macro color 17	248--255
CH-11	Strobe	Turn on the light	0---3
		Synchro strobe speed slow to fast (1HZ-25HZ)	4---203

		Random strobe	204--255
CH-12	Dimmer	dark to bright linear dimming	0 --- 255
CH-13	Dimmer adjust	Dimmer adjustment control	0 --- 255
CH-14	Pan	Pan control	0 --- 255
CH-15	Pan adjustment	Pan adjustment control	0 --- 255
CH-16	Tilt	Tilt control	0 --- 255
CH-17	Tilt adjustment	Tilt adjustment control	0 --- 255
CH-18	Dimming Mode	Mode -1	0 --- 49
		Mode -2	50 --- 99
		Mode -3	100---149
		Mode -4	150---255
CH-19	Reset	NO	0-250
		Reset within 5s	251---255
CH-20	Zoom	Zoom	0-255
		0~60°	0--155

CH-21	Lens rotation	Clockwise infinite rotation	156--205
		Counterclockwise rotation	206--255
CH-22	Pattern rotation	NO	0--9
		Monochrome dynamic pattern 1	10--17
		Monochrome dynamic pattern 2	18--25
		.....	.....
		Monochrome pattern 21	170--177
		Mixed color dynamic pattern 1	178--185
		Mixed color dynamic pattern 2	186--193
		.....	.....
CH-22	Pattern rotation	Mixed color dynamic pattern 9	242--249
		Mixed color dynamic pattern 10	250--255
	Pattern effect	No	0--9

CH-23	speed	Forward, from fast to slow（with 22CH）	10--132
		Reverse, from slow to fast(with 22CH)	133--255
CH-24	Pattern effect fade	Pattern effect fade	0-255
CH-25	Background R	Pattern effect R	0-255
CH-26	Background G	Pattern effect G	0-255
CH-27	Background B	Pattern effect B	0-255
CH-28	Background W	Pattern effect W	0-255
CH-29	Pattern dimming	Pattern 0-100% dimming	0-255
CH-30	Background dimming	Background 0-100% dimming	0-255
CH-31	Pattern change	Pattern change control	0-255
CH-32	Pattern movement	Pattern movement (with 22CH)	0-255
CH-33	Prospects strobe	Prospects strobe	0-255
CH-34	Background strobe	Background strobe	0-255

CH-35	Background pattern selection	Background selection	0-255

DMX channel´s functions and values (42 DMX channels):

Channel	Display	Function	Value
CH-1	Red	Red dimming	0 --- 255
CH-2	Red adjustment	Red adjustment	0 --- 255
CH-3	Green	Green dimming	0 --- 255
CH-4	Green adjustment	Green adjustment	0 --- 255
CH-5	Blue	Blue dimming	0 --- 255
CH-6	Blue adjustment	Blue dimming	0 --- 255
CH-7	White	White dimming	0 --- 255
CH-8	White adjustment	White adjustment	0 --- 255
		No	0 ---15
		R100%, G UP, B 0%	16---35
		R DOWM, G 100%, B 0%	36---55

CH-9	Color temperature	R 0%, G 100%, B UP	56---75
		R0%, G DOWM, B 100%	76---95
		R UP, G0%, B100%	96---115
		R 100%, G 0%, B DOWM	116--135
		R100%, G UP, B UP	136---155
		R DOWM, G DOWM, B 100%	156---175
		R100%G100%B100%W100%	176---195
CH-9	Color temperature	2800K	196---200
		3200K	201---205
		3500K	206---210
		4000K	211---215
		4500K	216---220
		5000K	221---225
		5500K	226--230

		6000K	231--235
		6500K	236--240
		7000K	241--245
		7500K	246--250
		8000K	251--255
CH-10	Macro color	No	0--9
		Macro color 1	10--23
CH-10	Macro color	Macro color 2	24--37
		....	....
		Macro color 16	234--247
		Macro color 17	248--255
CH-11	Strobe	Turn on the light	0---3
		Synchro strobe speed slow to fast (1HZ-25HZ)	4---203
		Random strobe	204--255

CH-12	Dimmer	dark to bright linear dimming	0 --- 255
CH-13	Dimmer adjust	Dimmer adjustment control	0 --- 255
CH-14	Pan	Pan control	0 --- 255
CH-15	Pan adjustment	Pan adjustment control	0 --- 255
CH-16	Tilt	Tilt control	0 --- 255
CH-17	Tilt adjustment	Tilt adjustment control	0 --- 255
CH-18	Dimming Mode	Mode -1	0 --- 49
		Mode -2	50 --- 99
		Mode -3	100---149
		Mode -4	150---255
CH-19	Reset	NO	0-250
		Reset within 5s	251---255
CH-20	Zoom	Zoom	0-255
CH-21	Lens rotation	0~60°	0--155
		Clockwise infinite rotation	156--205

		Counterclockwise rotation	206--255
CH-22	R1 LED dimming	R1 LED dimming	0-255
CH-23	G1 LED dimming	G1 LED dimming	0-255
CH-24	B1 LED dimming	B1 LED dimming	0-255
CH-25	R2 LED dimming	R2 LED dimming	0-255
CH-26	G2 LED dimming	G2 LED dimming	0-255
CH-27	B2 LED dimming	B2 LED dimming	0-255
CH-28	.....	.....	.....
CH-40	R7 LED dimming	R7 LED dimming	0-255
CH-41	G7 LED dimming	G7 LED dimming	0-255
CH-42	B7 LED dimming	B7 LED dimming	0-255

DMX channel´s functions and values (49 DMX channels):

Channel	**Display**	**Function**	**Value**
CH-1	Red	Red dimming	0 --- 255
CH-2	Red adjustment	Red adjustment	0 --- 255

CH-3	Green	Green dimming	0 --- 255
CH-4	Green adjustment	Green adjustment	0 --- 255
CH-5	Blue	Blue dimming	0 --- 255
CH-6	Blue adjustment	Blue dimming	0 --- 255
CH-7	White	White dimming	0 --- 255
CH-8	White adjustment	White adjustment	0 --- 255
CH-9	Color temperature	No	0 ---15
		R 100%, G UP, B 0%	16---35
		R DOWM, G1 00%, B 0%	36---55
		R 0%, G 100%, B UP	56---75
		R 0%, G DOWM, B 100%	76---95
		R UP, G0%,B100%	96---115
		R 100%, G0%, B DOWM	116--135
		R100%, G UP, B UP	136---155

CH-9		R DOWM, G DOWM, B 100%	156---175
		R100%G100%B100%W100	176---195
	Color temperature	2800K	196---200
		3200K	201---205
		3500K	206---210
		4000K	211---215
		4500K	216---220
		5000K	221---225
		5500K	226--230
		6000K	231--235
		6500K	236--240
		7000K	241--245
		7500K	246--250
		8000K	251--255
		No	0--9

CH-10	Macro color	Macro color 1	10--23
		Macro color 2	24--37
		....	....
		Macro color 16	234--247
		Macro color 17	248--255
CH-11	Strobe	Turn on the light	0---3
		Synchro strobe speed slow to fast (1HZ-25HZ)	4---203
		Random strobe	204--255
CH-12	Dimmer	dark to bright linear dimming	0 --- 255
CH-13	Dimmer adjust	Dimmer adjustment control	0 --- 255
CH-14	Pan	Pan control	0 --- 255
CH-15	Pan adjustment	Pan adjustment control	0 --- 255
CH-16	Tilt	Tilt control	0 --- 255
CH-17	Tilt adjustment	Tilt adjustment control	0 --- 255

CH-18	Dimming Mode	Mode -1	0 --- 49
		Mode -2	50 --- 99
		Mode -3	100---149
		Mode -4	150---255
CH-19	Reset	NO	0-250
		Reset within 5s	251---255
CH-20	Zoom	Zoom	0-255
CH-21	Lens rotation	0~60°	0--155
		Clockwise infinite rotation	156--205
		Counterclockwise rotation	206--255
CH-22	R1 LED dimming	R1 LED dimming	0-255
CH-23	G1 LED dimming	G1 LED dimming	0-255
CH-24	B1 LED dimming	B1 LED dimming	0-255
CH-25	W1 LED dimming	W1 LED dimming	0-255
CH-26	.....	.....	0-255

CH-46	R7 LED dimming	R7 LED dimming	0-255
CH-47	G7 LED dimming	G7 LED dimming	0-255
CH-48	B7 LED dimming	B7 LED dimming	0-255
CH-49	W7 LED dimming	W7 LED dimming	0-255

DMX channel´s functions and values (51 DMX channels):

Channel	**Display**	**Function**	**Value**
CH-1	Pan	0-540°	0 --- 255
CH-2	Pan adjustment	16bit adjustment	0 --- 255
CH-3	Tilt	0-205°	0 --- 255
CH-4	Tilt adjustment	16bit adjustment	0 --- 255
CH-5	Pan Tilt speed	Speed from fast to slow	0 --- 255
CH-6	Zoom	Angle from small to large	0 --- 255
		0~60°	0-155
		Clockwise infinite rotation from fast to slow	156-205

CH-7	Lens rotation	Counterclockwise rotation from slow to fast	206-255
CH-8	Dimmer	dark to bright linear dimming	0 --- 255
CH-9	Strobe	Turn on the light	0---3
		Synchro strobe speed From slow to fast (1HZ-25HZ)	4---203
		Random strobe	204--255
CH-10	R dimming	dark to bright linear dimming	0-255
CH-11	G dimming	dark to bright linear dimming	0-255
CH-12	B dimming	dark to bright linear dimming	0-255
CH-13	W dimming	dark to bright linear dimming	0-255
		No	0 ---15
		R 100%, G UP, B 0%	16---35
		R DOWM, G 100%, B 0%	36---55
		R 0%, G 100%, B UP	56---75

CH-14	Color temperature	R 0%, G DOWM, B 100%	76---95
		R UP, G 0%, B 100%	96---115
		R100%, G 0%, B DOWM	116---135
		R100%, G UP, B UP	136---155
		R DOWM. G DOWM. B 100%	156---175
		R100%,G100%,B100%,W100%	176---195
		2800K	196---200
		3200K	201---205
		3500K	206---210
		4000K	211---215
		4500K	216---220
		5000K	221---225
		5500K	226--230
CH-14	Color temperature	6000K	231--235
		6500K	236--240

		7000K	241--245
		7500K	246--250
		8000K	251--255
CH-15	Macro color	No	0--9
		Macro color 1	10--23
		Macro color 2	24--37
		....	....
		Macro color 16	234--247
CH-15	Macro color	Macro color 17	248--255
CH-16	Static pattern	No	0--9
		Monochrome pattern 1	10--19
		Monochrome pattern 2	20--29
		.....	.....
		Monochrome pattern 12	120--129
		Mixed color pattern 1	130--145

		Mixed color pattern 2	146--161
		....	....
		Mixed color pattern 7	226--241
		Mixed color pattern 8	242--255
CH-17	Dynamic pattern	NO	0--9
		Monochrome dynamic pattern 1	10--17
		Monochrome dynamic pattern 2	18--25
		.....	.....
		Monochrome pattern 21	170--177
CH-17	Dynamic pattern	Mixed color dynamic pattern 1	178--185
		Mixed color dynamic pattern 2	186--193
		.....	.....
		Mixed color dynamic pattern 9	242--249
		Mixed color dynamic pattern 10	250--255
	Dynamic	Forward, from fast to slow（with 17CH）	0--127

CH-18	pattern speed	Reverse, from slow to fast (with 17CH)	128--255
CH-19	Back color R	dark to bright linear dimming	0-255
CH-20	Back color G	dark to bright linear dimming	0-255
CH-21	Back color B	dark to bright linear dimming	0-255
CH-22	Back color W	dark to bright linear dimming	0-255
CH-23	Reset	NO	0-250
		Reset within 5s	251-255
CH-24	R1 LED dimmer	R1 LED dimming	0-255
CH-25	G1LED dimmer	G1 LED dimming	0-255
CH-26	B1 LED dimmer	B1 LED dimming	0-255
CH-27	W1LED dimmer	W1 LED dimming	0-255
CH-28	……	……	……
CH-48	R7 LED dimmer	R7 LED dimming	0-255
CH-49	G7LED dimmer	G7 LED dimming	0-255
CH-50	B7LED	B7 LED dimming	0-255

CH-51	W7LED dimmer	W7 LED dimming	0-255

DMX channel´s functions and values (56 DMX channels):

Channel	Display	Function	Value
CH-1	Red	Red dimming	0 --- 255
CH-2	Red adjustment	Red adjustment	0 --- 255
CH-3	Green	Green dimming	0 --- 255
CH-4	Green adjustment	Green adjustment	0 --- 255
CH-5	Blue	Blue dimming	0 --- 255
CH-6	Blue adjustment	Blue dimming	0 --- 255
CH-7	White	White dimming	0 --- 255
CH-8	White adjustment	White adjustment	0 --- 255
		No	0 ---15
		R 100%, G UP, B 0%	16---35
		R DOWM, G 100%, B 0%	36---55
		R 0%, G 100%, B UP	56---75

CH-9	Color temperature	R 0%, G DOWM, B 100%	76---95
		R UP, G 0%, B 100%	96---115
		R 100%, G0%, B DOWM	116--135
		R 100%, G UP, B UP	136---155
		R DOWM, G DOWM, B 100%	156---175
		R 100%, G 100%, B 100%, W 100%	176---195
		2800K	196---200
		3200K	201---205
CH-9	Color temperature	3500K	206---210
		4000K	211---215
		4500K	216---220
		5000K	221---225
		5500K	226--230
		6000K	231--235

		6500K	236--240
		7000K	241--245
		7500K	246--250
		8000K	251--255
CH-10	Macro color	No	0--9
		Macro color 1	10--23
		Macro color 2	24--37
		....	....
		Macro color 16	234--247
		Macro color 17	248--255
CH-11	Strobe	Turn on the light	0---3
		Synchro strobe speed slow to fast (1HZ-25HZ)	4---203
		Random strobe	204--255
CH-12	Dimmer	dark to bright linear dimming	0 --- 255

CH-13	Dimmer adjust	Dimmer adjustment control	0 --- 255
CH-14	Pan	Pan control	0 --- 255
CH-15	Pan adjustment	Pan adjustment control	0 --- 255
CH-16	Tilt	Tilt control	0 --- 255
CH-17	Tilt adjustment	Tilt adjustment control	0 --- 255
CH-18	Dimming Mode	Mode -1	0 --- 49
		Mode -2	50 --- 99
		Mode -3	100---149
		Mode -4	150---255
CH-19	Reset	NO	0-250
		Reset within 5s	251---255
CH-20	Zoom	Zoom	0-255
CH-21	Lens rotation	0~60°	0--155
		Clockwise infinite rotation	156--205
		Counterclockwise rotation	206--255

CH-22	Static pattern	No	0--9
		Monochrome pattern 1	10--17
		Monochrome pattern 2	18--25
		.....	.....
		Monochrome pattern 21	170--177
		Mixed color pattern 1	178--185
		Mixed color pattern 2	186--193
		....	....
		Mixed color pattern 9	242--249
		Mixed color pattern 10	250--255
CH-23	Dynamic pattern speed	No	0--9
		Forward, from fast to slow（with 22CH）	10--132
CH-23	Dynamic pattern speed	Reverse, from slow to fast (with 22CH)	133--255
CH-24	Pattern effect fade	Pattern effect fade	0-255

CH-25	color R	dark to bright linear dimming	0-255
CH-26	color G	dark to bright linear dimming	0-255
CH-27	color B	dark to bright linear dimming	0-255
CH-28	color W	dark to bright linear dimming	0-255
CH-29	Pattern dimming	Pattern 0-100% dimming	0-255
CH-30	Background dimming	Background 0-100% dimming	0-255
CH-31	Pattern change	Pattern change control	0-255
CH-32	Pattern movement	Pattern movement (with 22CH)	0-255
CH-33	Prospects strobe	Prospects strobe	0-255
CH-34	Background strobe	Background strobe	0-255
CH-35	pattern selection	Background selection	0-255
CH-36	R1 LED dimming	R1 LED dimming	0-255
CH-37	G1 LED dimming	G1 LED dimming	0-255
CH-38	B1 LED dimming	B1 LED dimming	0-255
CH-39	.....	.....	0-255

CH-54	R7 LED dimming	R7 LED dimming	0-255
CH-55	G7 LED dimming	G7 LED dimming	0-255
CH-56	B7 LED dimming	B7 LED dimming	0-255

Attention

- When the lamp is powered on and lit, try to avoid looking directly at the light emitted by the lamp beads.
- When loading or unloading the lamp, be sure to cut off the main power supply connected to the device before you can open the cover on which the lamp bead is installed.

Trouble Shooting

Following are a few common problems that may occur during operation. Here are some suggestions for easy troubleshooting:

A. The unit does not work, no light and the fan does not work

1. Check the connection of power and main fuse.
2. Measure the mains voltage on the main connector.
3. Check the power on LED.

B. Not responding to DMX controller

1. DMX LED should be on. If not, check DMX connectors, cables to see if link properly.
2. If the DMX LED is on and no response to the channel, check the address settings and DMX polarity.
3. If you have intermittent DMX signal problems, check the pins on connectors or on PCB of the unit or the previous one.

4. Try to use another DMX controller.
5. Check if the DMX cables run near or run alongside to high voltage cables that may cause damage or interference to DMX interface circuit.

C. One of the channels is not working well

1. The stepper motor might be damaged or the cable connected to the PCB is broken.
2. The motor's drive IC on the PCB might be out of condition.

Products Size

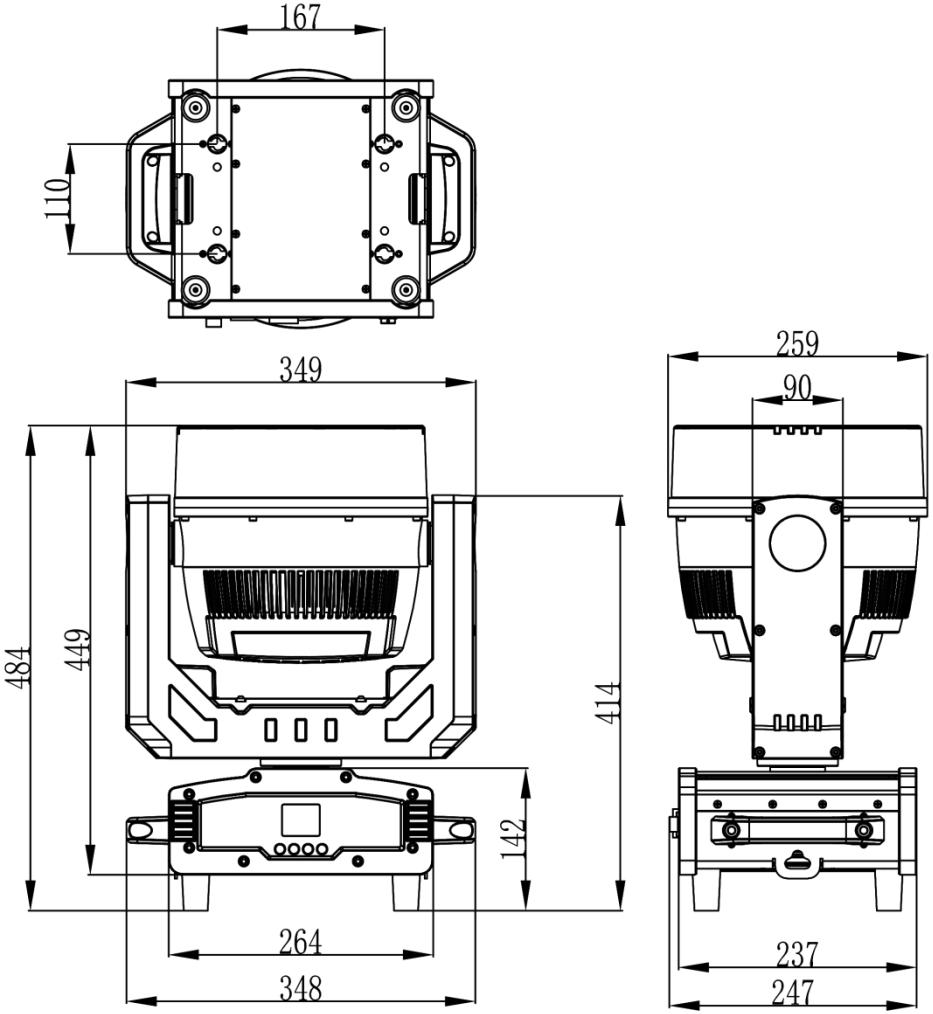
167
110
349
484
449
414
142
264
348
259
90
237
247

Fixture Cleaning

The outside of the lens must always be wiped so that the lighting effect is better. Wipe frequency according to the environment. Humidity, excessive smoke, and a particularly dirty environment can make the lens dusty.

- Use a soft cloth and special glass cleaner.
- Wipe the exterior of the lens at least every 30 days.
- Use vacuum cleaners or air guns inside the luminaire and clean it at least twice a year.
- Always be sure to dry all parts completely before plugging the unit back in.

Multiple Unit Power Linking

With this feature you can connect the fixtures to one another using the power-con input and output sockets. The maximum that can be connected is 3 fixtures @ 120V and 7 fixtures @ 240V. After the maximum connected fixtures you will need to use a new power outlet.

NOTE: USE WITH CAUTION WHEN POWER LINKING OTHER FIXTURES TO THE 760BW AS THE POWER CONSUMPTION OF OTHER LIGHTING FIXTURES WILL VARY!

Fuse Replacement

Unplug the unit from any power source it may be connected to. Once the power has been disconnected, use a Phillips head screw driver to unscrew the fuse holder located next to the power-con input.
Remove the bad fuse and replace with a new one, and screw the fuse holder back in.